PACIFIC LASERTEC™

HELIUM NEON LASER POWER SUPPLY MODULE
MODEL: 05-LPM-851-045

INPUT SPECIFICATIONS	
Voltage (VDC)	10 to 16
Power @ Max Voltage & Current Output (W)	< 14.5

OUTPUT SPECIFICATIONS	
Sustaining Voltage (VDC)	1000 to 1850
Start Voltage (kVDC)	> 10
Current Setting (mA)	4.5 ± 0.2
Power (W)	< 7.5
Current Ripple (% Peak to Peak)	< 0.3
Current Ripple (% RMS)	< 0.1
Time Delay (Seconds)	3 to 7
TTL Disable:	Yes

ENVIRONMENTAL SPECIFICATIONS	OPERATING	NON-OPERATING
Temperature (°C)	-20 to + 60	-40 to + 80
Altitude (meters)	0 to 12,000	0 to ∞
Relative Humidity (%, non-condensing)	0 to 99%	0 to 99%
Mechanical Shock (g)	< 50 for < 11 msec	< 50 for < 11 msec < 100 for < 1 msec
Agency Approvals	cTUVus, IEC 62368-1, EN 61326-1, EU 2015/863 (RoHS 3)	

Please contact factory for other options. Specifications are subject to change without notice.

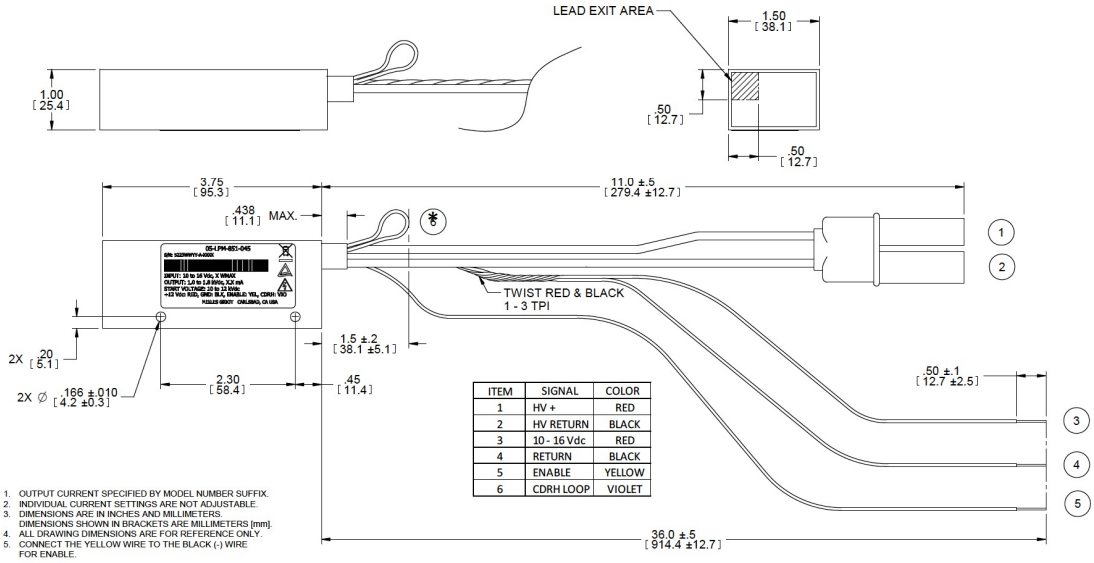

ITEM	SIGNAL	COLOR
1	HV +	RED
2	HV RETURN	BLACK
3	10 - 16 Vdc	RED
4	RETURN	BLACK
5	ENABLE	YELLOW
6	CDRH LOOP	VIOLET

* When loop is cut, 3-7 second turn-on delay is deactivated

1. OUTPUT CURRENT SPECIFIED BY MODEL NUMBER SUFFIX.
2. INDIVIDUAL CURRENT SETTINGS ARE NOT ADJUSTABLE.
3. DIMENSIONS ARE IN INCHES AND MILLIMETERS. DIMENSIONS SHOWN IN BRACKETS ARE MILLIMETERS [mm].
4. ALL DRAWING DIMENSIONS ARE FOR REFERENCE ONLY.
5. CONNECT THE YELLOW WIRE TO THE BLACK (-) WIRE FOR ENABLE.

© Pacific Lasertec, LLC. All Rights Reserved

Rev 9.14.21